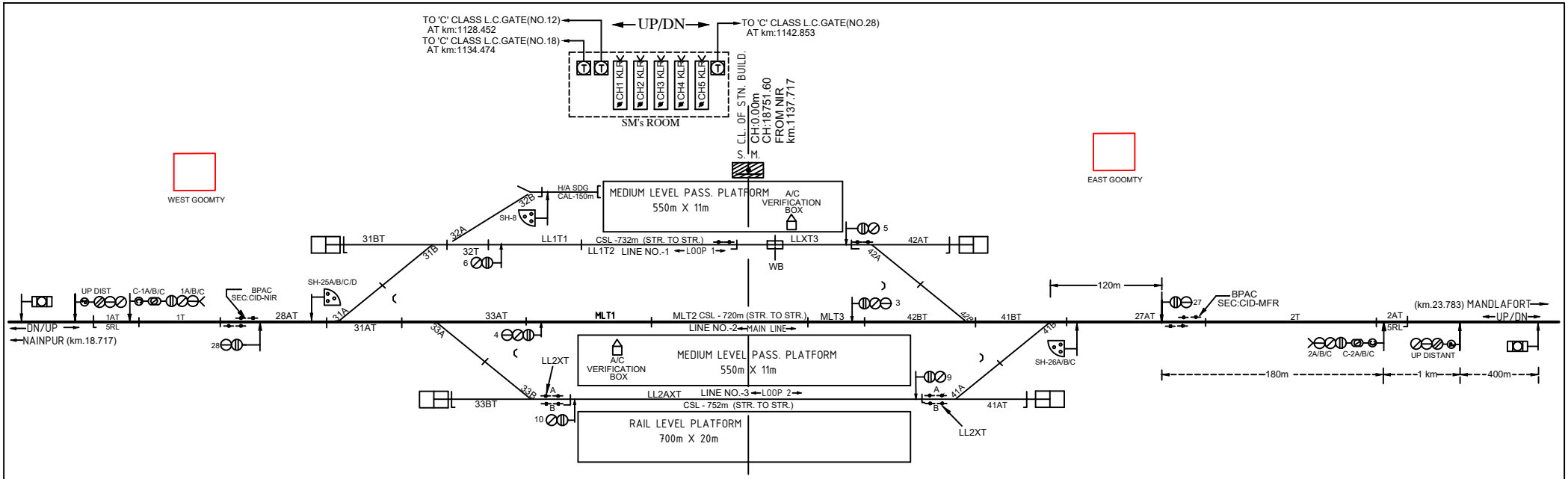

SYSTEM OF WORKING				
SL. NO.	SYSTEM	SECTION	INSTRUMENT	LOCATION
1.	ABSOLUTE BLOCK	CHIRAIDONGRI-MANDLAFORT	✱SLBP	SM's ROOM
2.	ABSOLUTE BLOCK	CHIRAIDONGRI-NAINPUR	✱SLBP	SM's ROOM

✱PROVIDED WITH BLOCK PROVING AXLE COUNTER (BPAC) WITH 'UFSBI'.

VDU IN SM's ROOM

TOTAL NO. OF CONTROLS-1 TO 60
SIGNAL & SLOT CONTROLS-1 TO 30 (SPACES - 7,11 TO 24 & 29,30)
POINT CONTROLS-31 TO 50 (SPACES-34 TO 40, 43 TO 50)
SIDING POINT CONTROLS-51 TO 55 (SPACES- 51 TO 55)
OTHER CONTROLS-56 TO 60 (SPACES- 56 TO 60)

CRANK HANDLE GROUPING FOR EMERGENCY OPERATION OF POINTS		
CRANK HANDLE	CONTROL POINTS	LOCATION
CH1	31A/B	SM's ROOM
CH2	32A/B	SM's ROOM
CH3	33A/B	SM's ROOM
CH4	41A/B	SM's ROOM
CH5	42A/B	SM's ROOM

DRG.No.- SI/NGP/21, W.No.-B

CHIRAIDONGRI

km:1137.717

STD-II(R) CODE-CID CLASS-'B'