SHIKARA

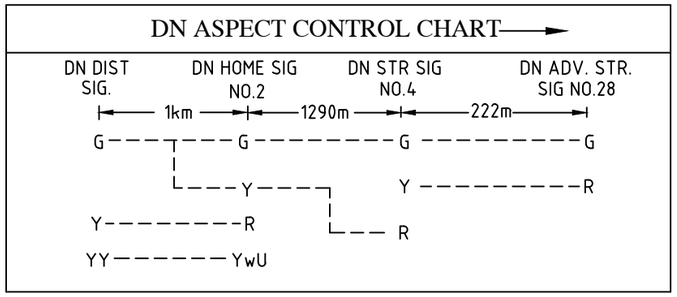

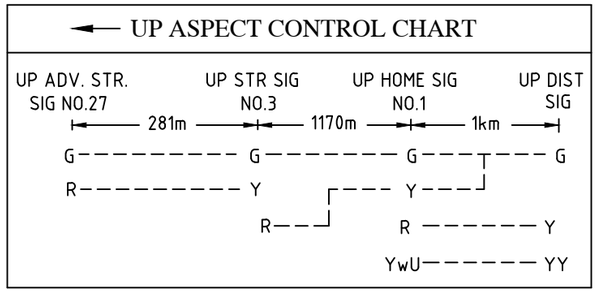

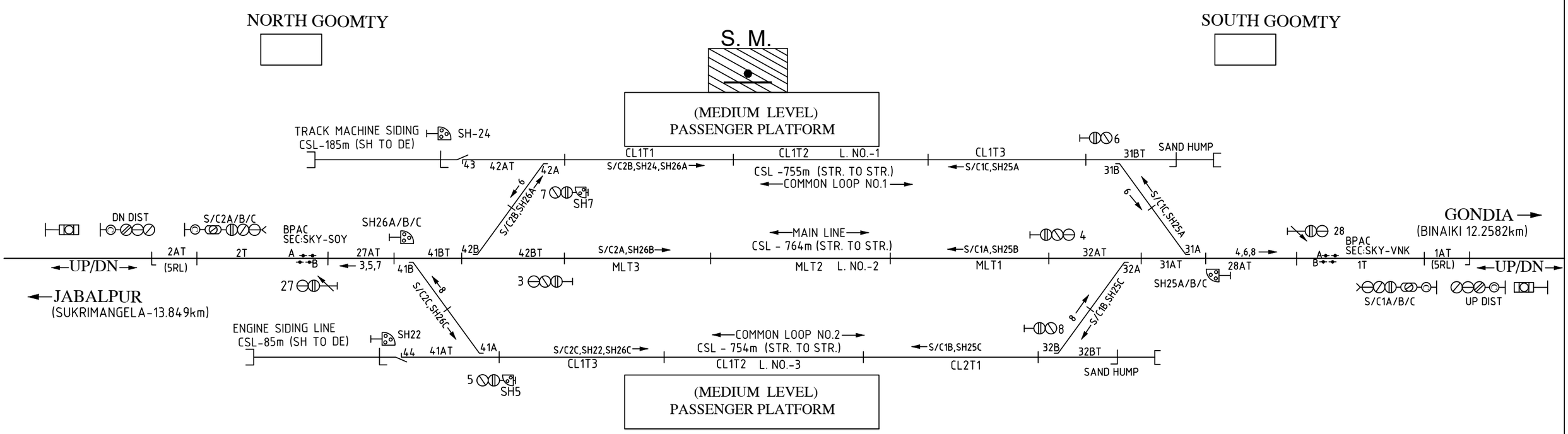

CRANK HANDLE GROUPING FOR EMERGENCY OPERATION OF POINTS		
CRANK HANDLE	CONTROL POINTS	LOCATION
CH1	31A/B	IN PANEL ROOM
CH2	32A/B	IN PANEL ROOM
CH3	41A/B,44	IN PANEL ROOM
CH4	42A/B,43	IN PANEL ROOM

SYSTEM OF WORKING				
SL. NO.	SYSTEM	SECTION	BLOCK INSTRUMENT	LOCATION
1.	ABSOLUTE BLOCK	SHIKARA-BINAIKI	* SLBP	PANEL ROOM
2.	ABSOLUTE BLOCK	SHIKARA-SUKRIMANGELA	* SLBP	PANEL ROOM

* PROVIDED WITH BLOCK PROVING AXLE COUNTER (BPAC)

SHIKARA
S.I. 404/14

km.1173.2837

CODE– SKY STD–II(R)