हिरदामाली
HIRDAMALI

(E.I. , CODE- HDM , CLASS-B, STD.-II

(KM:-1016.867)

UP/DN

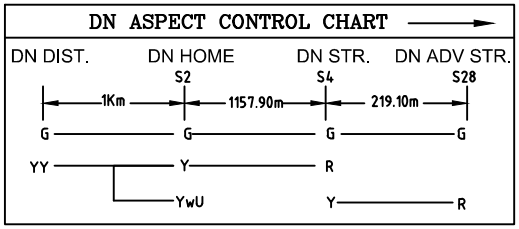

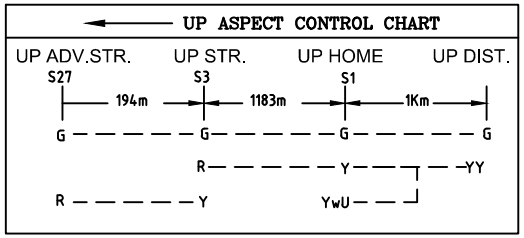

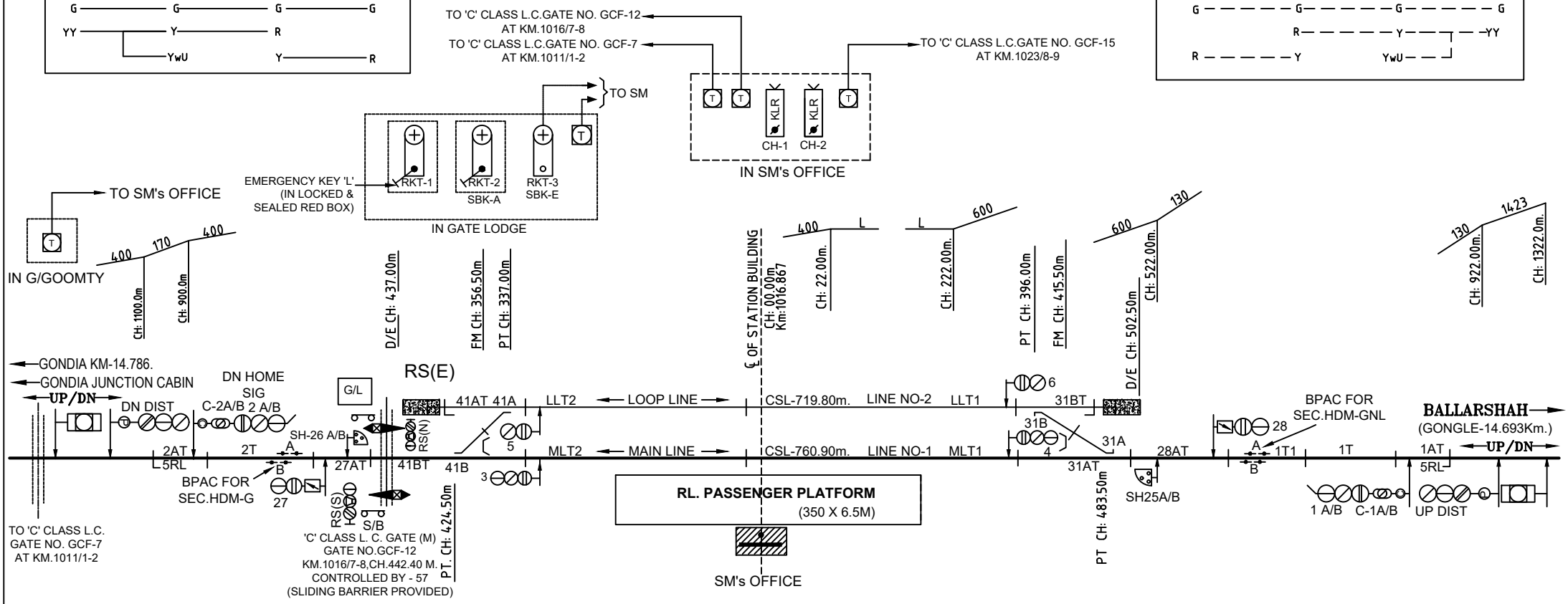

CONTROLS IN S.M'S OFFICE

TOTAL NUMBER OF CONTROLS: 1 TO 60.

SIGNAL & SLOT CONTROLS: 1 TO 30 (SPACES 7-24,29,30)

POINTS CONTROLS: 31 TO 50 (SPACES 32 TO 40.42 TO 50)

SIDING POINT CONTROLS: 51 TO 55 (SPACES 51 TO 55)

L.C. GATE CONTROLS: 56 TO 60 (SPACES 56,58 TO 60)

CRANK HANDLE GROUPING FOR EMERGENCY OPERATION OF POINTS

CRANK HANDLE	CONTROL POINTS	LOCATION
CH1	31A/B	SM`s OFFICE
CH2	41A/B	SM`s OFFICE

SYSTEM OF BLOCK WORKING

S. NO.	SYSTEM	SECTION	BLOCK INSTRUMENT	LOCATION
1	ABSOLUTE BLOCK	HDM-G	* BLOCK PANEL	SM`s OFFICE
2	ABSOLUTE BLOCK	HDM - GNL	* BLOCK PANEL	SM`s OFFICE

*PROVIDED WITH BLOCK PROVING AXLE COUNTER (BPAC).

DRG NO

SI.420//14

ALT-E