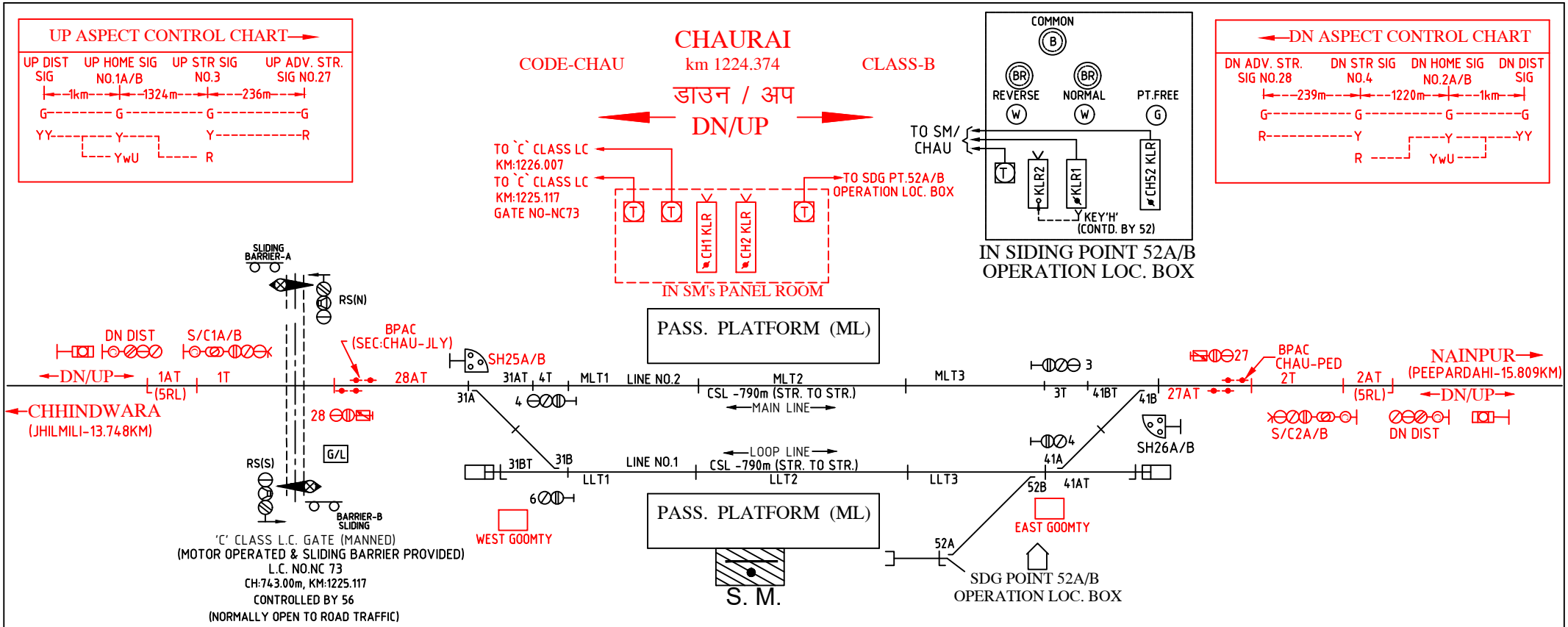

SYSTEM OF BLOCK WORKING				
SL. NO.	SYSTEM	SECTION	INSTRUMENT	LOCATION
1.	ABSOLUTE BLOCK	CHAURAI-PEEPARDAHI	* SLBP	SM`s ROOM
2.	ABSOLUTE BLOCK	CHAURAI-JHILIMILI	* SLBP	SM`s ROOM

* PROVIDED WITH BLOCK PROVING AXLE COUNTER (BPAC).

CRANK HANDLE GROUPING FOR EMERGENCY OPERATION OF POINTS		
CRANK HANDLE	CONTROL POINTS	LOCATION
CH1	31A/B	SM`s ROOM
CH2	41A/B	SM`s ROOM
CH52	52A/B	SDG PT OPERATION LOC. BOX