JHILIMILI

CODE-JLY km 1238.122 CLASS-B

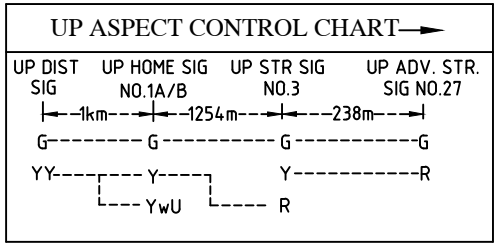

डाउन / अप

DN/UP

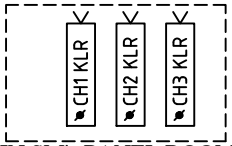

IN SM's PANEL ROOM

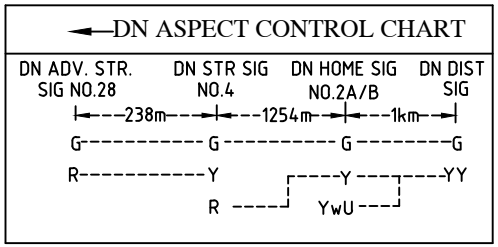

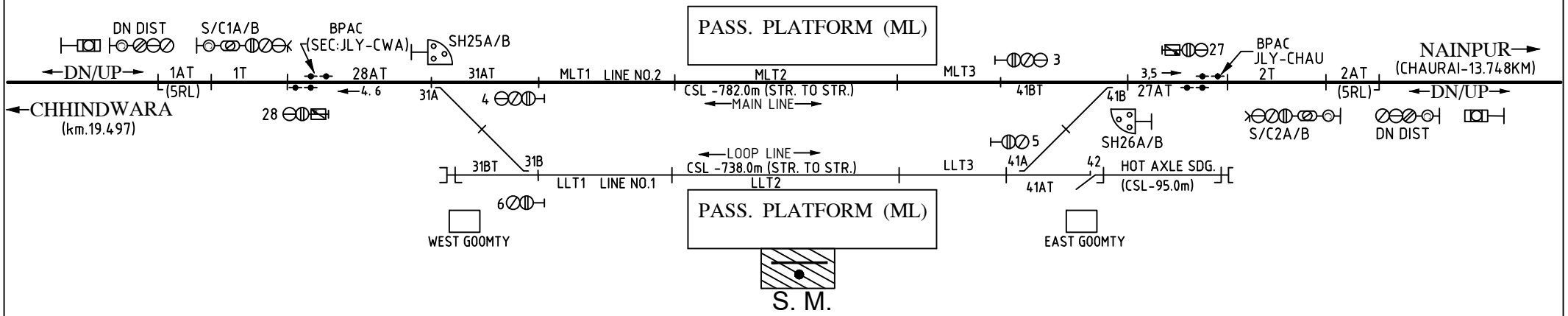

CRANK HANDLE GROUPING FOR EMERGENCY OPERATION OF POINTS		
CRANK HANDLE	CONTROL POINTS	LOCATION
CH1	31A/B	SM`s ROOM
CH2	41A/B	SM`s ROOM
CH3	42	SM`s ROOM

SYSTEM OF BLOCK WORKING				
SL. NO.	SYSTEM	SECTION	INSTRUMENT	LOCATION
1.	ABSOLUTE BLOCK	JHILMILI-CHHINDWARA	*BLOCK PANEL	PANEL ROOM
2.	ABSOLUTE BLOCK	JHILIMILI-CHAURAI	*BLOCK PANEL	PANEL ROOM

*PROVIDED WITH BLOCK PROVING AXLE COUNTER (BPAC).